Overbed Table

HUMAN CARE
Your Life. Your Way.

Stable
Angle-adjustable table surface
High pressure washable









Human Care's angle-adjustable overbed table works perfectly for users who need support to facilitate, for example, reading or eating from a wheelchair, armchair or bed.

The table top is made of hygienic ABS plastic material and has a tilt function from -40 degrees to +40 degrees. The table top has smooth edges that prevent items from sliding or falling off. The table has four wheels, two of which have brakes. The undercarriage is stable and wide, with plenty of space to be easily placed next to the user.

Product specification

Product name	Art. nr.	Wheel diameter	Material	Table top length	Table top width	Safe working load
Overbed Table	K058PTS	5 cm / 2"	ABS-belagt plastmaterial	82 cm / 32,3"	38 cm / 15"	20 kg / 44,1 lbs

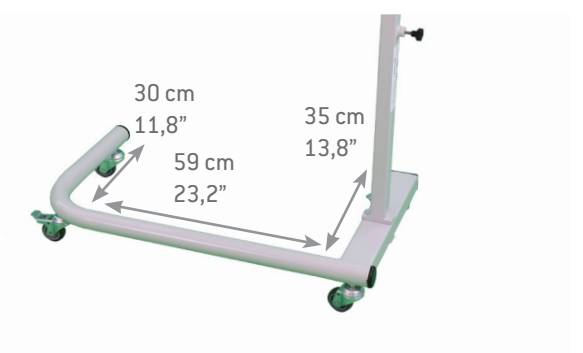

98029, Rev2, EN, Bedtable, Product Sheet, Oct26

HUMAN CARE AB Stambanegatan 17 117 60 Stockholm Tel:- +46 8 665 35 00 info.se@humancaregroup.com