HUMAN CARE
Your Life. Your Way.

Care Assist Rail

90702

User Manual

Content

ENGLISH

User Manual	3
Compliances and Standards	4
Technical Specifications	5
Responsibility of users	5
Safety Advice	6
Intended Use	7
Assembly/Disassembly Instructions	8
Operation Instructions	12
Maintenance and Service	13
Recycling	13

User Manual

Important!

You must read the user manual for the bed as well as the user manual for the accessory prior to usage. Keep this booklet and information handy for future use.

Symbols

WARNING symbol indicates a potentially hazardous situation which, if not avoided, could result in serious injury to the user or damage to property and/or the device itself.

INFORMATION symbol indicates recommendations and information for proper, trouble-free usage.

WEIGHT CAPACITY symbol indicates maximum user weight for the product. Do not exceed this weight in any circumstance.

CE MARKING symbol indicates product meets requirements of EU Directive 93/42/EEC (MDD) and/or EU Regulation 2017/745 (MDR).

MEDICAL DEVICE symbol indicates that the product is a medical device according to the definition of medical device in EU Directive 93/42/EEC (MDD) and/or EU Regulation 2017/745 (MDR).

RECYCLE according to local regulations.

READ INSTRUCTIONS and ensure you fully understand them before using this product.

Product modification is not permitted.
Before use, always check that the product is not damaged or worn.

Human Care's products are continuously being developed and updated to provide our customers with the highest quality. We reserve the right to make design changes without prior notice.
Always make sure that you have the most recent version of the manual which is available for downloading from our website at www.humancaregroup.com.

Contact your local distributor if you have any questions about the product and its use.

Notice to user/patient in case of serious incident

Any serious incident that has occurred in relation to the product, should be reported to the local contact, who reports to the manufacturer, and the competent authority of the country in which the user/patient is established.

Compliances and Standards

Human Care is an ISO 13485:2016 certified Swedish medical device company. The Quality Management System is in compliance with US 21 CFR part 820.

The product is CE marked in accordance with EU Directive 93/42/EEC (MDD) and/or EU Regulation 2017/745 (MDR), as class I medical device.

The CE mark is on the product.

This bed complies with all requirements of the IEC/ISO International Standards: IEC 60601-2-52:2009

This User Manual informs you, as the operator, and your users, about the product features, assembly and operating functions necessary to ensure ease of operation, and safe handling of this product in its normal and expected environment.

You should therefore also regard this User Manual, as a practical reference book, to be kept near the product and readily available at all times, for anyone involved in its use or operation.

Is a warning triangle used for situations which require extra care and attention.

CAUTION!

Do not assemble or operate the bed accessory, before reading this manual, as personal injury or damage to product may occur!

Please contact Human Care in the event of any uncertainties or questions.

Product lifetime

The product´s expected lifetime is ten (10) years, if the product is used as intended and maintained according to the manufacturer´s instructions, depending on the intensity of use and maximum load applied during use. If the product label is no longer legible, the product should be discarded.

Technical Specifications

Specifications measurements (mm / inch)	
90702 (Care Assist Rail)	H x L: 375 mm x 250 mm / 14.6” x 9.8”
Distance from Care Assist Rail to Head board	365 mm / 14.4”

Responsibility of users

Instructions for the operator:

Please pay attention to your obligations, as the operator, in order to ensure the permanently safe operation of this medical product, minimising risks to the patient, user and/or third parties.

Any piece of technical equipment, electrical or otherwise, can prove hazardous, if not properly operated and maintained in accordance with its User Manual. It is recommended that you are informed of all operations and perform regular maintenance on equipment.

Definitions:

Operator

(e.g.: clinic, hospital, hospital management, nursing home), is every natural or legal person with property rights over the bed (including when subject to hiring, rental or lease arrangements).

Responsibility for the safe operation of this bed accessory lies with the operator.

User

(specialist medical staff, nurses, doctors, attendants and care staff) are persons who, on the basis of their training, experience or thorough instruction, are entitled to operate the bed on their own responsibility, or to carry out work on it, or who have received instruction in the handling of this bed. Furthermore, they are able to recognize and avoid possible hazards as well as assess the clinical condition of the patients.

Patient, Resident or Guest

In this manual, a patient is described as any person being ill, infirm, disabled, in need of care, or otherwise occupying this bed.

Each time the bed accessory is allocated, it is recommended that the patient is instructed in all the functions that are important for him/her, by the operator or user.

Safety Advice

Safety Symbol

In this manual the adjacent safety warning symbol is shown as:

This safety symbol does not replace all the written safety advice. You are instructed to read the safety advice and follow it precisely.

Safety for the operator

With the aid of this manual, which must be handed over together with the product, you must ensure that every user is instructed in the safe operation of the product before it is put into service for the first time.

Draw every user's attention to the possible hazards that can arise if the product is not used properly.

Pay attention to your obligations in order to ensure the permanently safe operation of this product to minimise all risks to the patient, user and/or third parties.

Regular preventative maintenance is the Operator's responsibility.

Only allow this product to be used by persons who have been instructed in its safe operation.

Make sure that stand-in or temporary staff are sufficiently well instructed in the safe operation of the product.

Safety advice for the user

Make sure that the operator instructs you in the safe operation of this product.

Each time, before using the product, check that it is in perfect working order.

Make sure that there are no obstacles (eg: bedside lockers, chairs, hoists, wall mounted fixtures, or equipment etc.) which could impede any adjusting or movement of the bed.

Intended Use

Care Assist Rails

Designed to facilitate patients safely in and out of bed, and or to reposition oneself in the bed. It is ergonomically designed to avoid the patient feeling restricted or restrained.

The Care Assist Rails come as a pair and are intended to be used together on the left and right hand side of the bed. However it is allowed to only assemble the left or the right alone, if needed.

Accessory intended for the following Floorline Beds

This accessory should only be used with Floorline models from Human Care with the article numbers in the below table.

It is important that only Human Care accessories are fitted to Human Care beds, as any incompatible accessories can create hazards.

Product Name	***Article Number***
Floorline-i EU	90300
Floorline-i AU	90301
Floorline-i US class 1	90302
Floorline-i UK	90303
Floorline-i Plus EU	90500
Floorline-i Plus AU class 1	90501
Floorline-i Plus AU	90502
Floorline-i Plus US class 1	90503
Floorline-i Plus UK	90504
Floorline LTC EU	90600
Floorline LTC EU wooden panel	90601
Floorline LTC UK	90602
Floorline LTC UK wooden panel	90603
Floorline LTC US class 1	90606
Floorline LTC US class 1 wooden panel	90607
Floorline LTC AU	90608
Floorline LTC AU wooden panel	90609

Assembly/Disassembly Instructions

Care Assist Rail (90702)

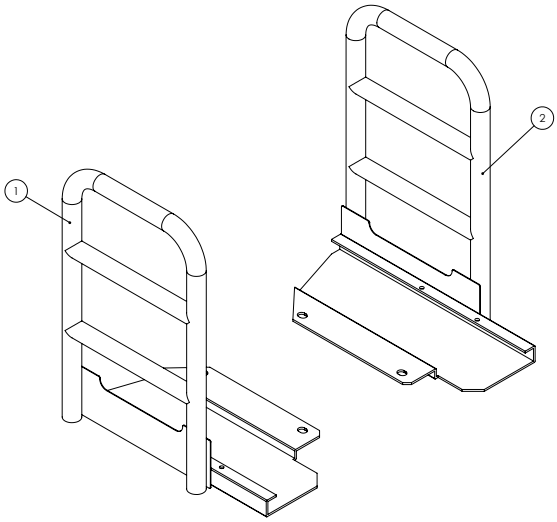

Content:

Number	Description	Qty.
1	Care Assist Rail Left	1
2	Care Assist Rail Right	1
3	Set Screw M6 (Allen Key 3 mm)	4
4	Screw M8 (Allen Key)	4
5	Lock Nut M8	4
6	Washer d=12 mm	4
7	Washer d=16	4
8	Screw M5 (Allen Key)	4
9	Locking Nut M5	4

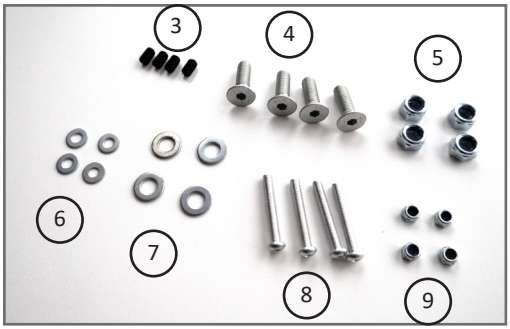

Assembly:

1. Fold up the bed's backrest to loosen the mattress retainer.

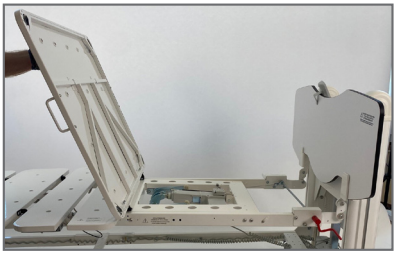

2. Unscrew the two screws with an allen key 3 mm.

3. Slide on the Care Assist Rail (1) onto the beds backrest.

**Make sure the holes of the care assist align with the holes in the backrest.

4. Place the screws (8) through the aligned holes.

5. Mount the Washer (6) and the Locking Nut (9) from the under side of the backrest by using a Wrench 8mm and an Allen Key 3 mm.

6. Place the two Screws M8 (4) in the inner holes of the backrest.

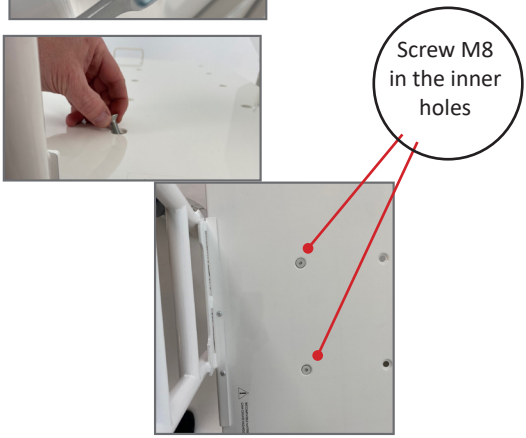

7. Mount the Washer (7) and the Locking Nut (5) from the under side of the backrest by using a Wrench 13mm and an Allen Key 5 mm.

8.Place the Set Screw M6 (3) in the outer holes of the under side of the Care Assist Rail.

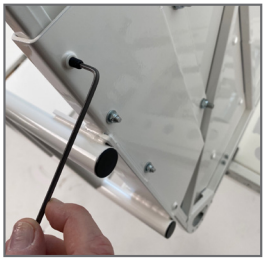

9. Screw on the Set Screw (3) with an Allen Key 3mm.

10. Repeat these assembly instructions step 1-9 with the second Care Assist Rail on the opposite side.

11. The Care Assist Rails are now ready to use.

Operation Instructions

Using the Care Assist Rail:

The Care Assist Rails should be used as an aid when the patient is changing position in bed and when moving to / from bed.

The Care Assist Rails are easy to mount and sits stably on the bed. They can be mounted on the right or left side of the bed or togeher.

The Care Assist Rails are stable and made of a grip-friendly surface.

Maintenance and service

Inspection, care and maintenance check list

User inspections of this accessory should be carried out together with the Floorline bed every 6 months.

Check: See bed description, accessories and all functions	• Check for Damage/Cleanliness • Confirm Secure • Perform Adjustment/Cleaning	OK	Faults: Action Cleaning Parts to Order
VISUAL CHECK of the Components			
Nuts/Bolts, Screws/Pins, Hinges/ Mounts/Bushes-component fixing points	Wear/Damage, Tighten & Secure Clean & Free		
Painted steel components	Intact, Clean & Securely Fitted		
Labels: Serial Number, Service, User/ Service Manuals	In Place & Readable		
PERFORMANCE CHECK			
Accessories	Confirm Full Operation		
Inspector's Name:	Inspector's Signature:		
Inspection result:	Date:		

If any problem persists, please call the customer service in your country.

Recycling

The product is built mostly from steel, or stainless steel. The surfaces have been finished with an electro-coated powdercoating.

Incorrect disposal of this equipment and its component parts may produce substances that are hazardous to the environment. Dispose of in accordance with all applicable national and local regulations.

HUMAN CARE SWEDEN (HQ)
Årstaängsvägen 21B
117 43 Stockholm
Phone: +46 8 665 35 00
Fax: +46 8 665 35 10
Email: info.se@humancaregroup.com

HUMAN CARE CANADA
10-155 Colonnade Road
Ottawa, ON K2E 7K1
Phone: +1 613 723 6734
Fax: +1 613 723 1058
Email: info.ca@humancaregroup.com

HUMAN CARE UNITED STATES
8006 Cameron Road, Suite K
Austin, TX 78754 USA
Phone: +1 512 476 7199
Fax: +1 512 476 7190
Email: info.us@humancaregroup.com

HUMAN CARE NEDERLAND
Elspeterweg 124
8076 PA Vierhouten
Phone: +31 577 412 171
Fax: +31 577 412 170
Email: info.nl@humancaregroup.com

www.humancaregroup.com

99928, Rev 1, ENG, User Manual, Care assist rail (FL), Apr 2022

HUMAN CARE
Your Life. Your Way.